TOTO®

LT401

Self-Rimming Lavatory

FEATURES

- 17-3/4" x 20-3/4"
- Vitreous china
- ADA compliant
- Concealed front overflow
- Complete with installation template and sealing compound

MODELS

- LT401
  Lavatory only, with single hole faucet center
- LT401.4
  Lavatory only with 4" faucet centers
- LT401.8
  Lavatory only with 8" faucet centers

COLORS/FINISHES

- Standard
  #01 Cotton
  #03 Bone
  #12 Sedona Beige

CODES/STANDARDS

- Meets and exceeds ASME A112.19.2/CSA B45.1
- Certifications: IAPMO(cUPC), State of Massachusetts , City of Los Angeles, and others
- ADA compliant
- Code compliance: UPC, IPC, NSPC, NPC Canada, and others

PRODUCT SPECIFICATION

The self-rimming lavatory shall be made of vitreous china. Lavatory shall be 20-3/4" x 17-3/4". Product shall be with front overflow and lavatory shall include mounting assembly and be ADA compliant. Lavatory shall be TOTO Model LT501_____.

LT401

Self-Rimming Lavatory

SPECIFICATIONS

• Waste	1-1/4" O.D.
• Size	20-3/8"W x 17-3/4"D
• Basin	15-1/2"W x 11"D
• Warranty	One Year Limited Warranty
• Material	Vitreous china
• Shipping Weight	LT401/LT401.4/LT401.8 21-1/2 lbs.
• Shipping Dimensions	LT401/LT401.4/LT401.8 21-1/4"L x 18-1/4"W x 9-1/2"H

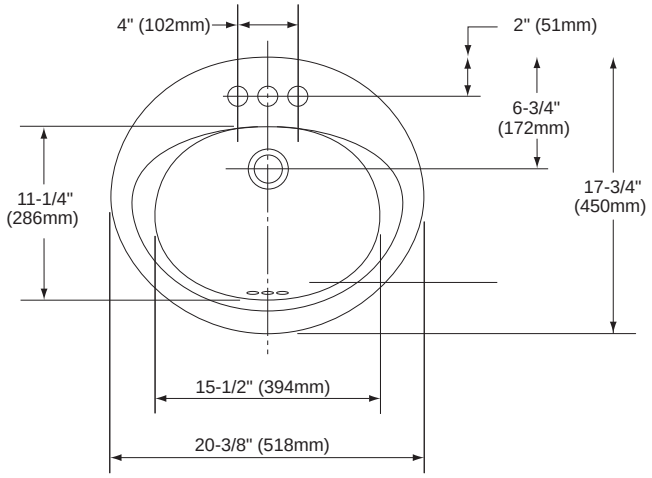

ADA Compliance Check

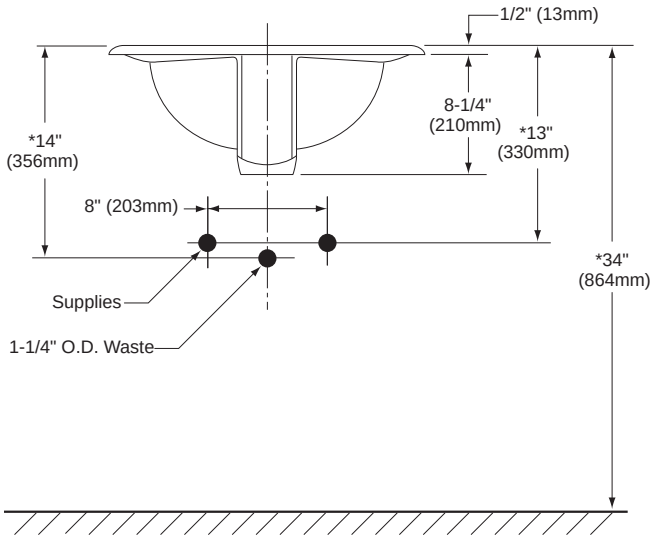

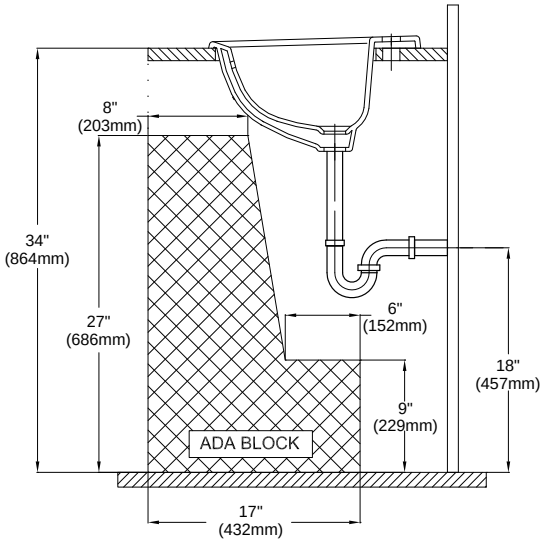

*Suggested dimension

TOTO®

These dimensions and specifications are subject to change without notice

Ph: (888) 295-8134 | Fax: (800) 699-4889 | www.totousa.com

#SS-00331 v.03

Printed in U.S.A. | © TOTO LTD. 07/09 | Printed on recycled paper ♻