BOBRICK

Technical Data

SURFACE-MOUNTED AUTOMATIC HAND DRYER

B-740 B-748

Specify Model Required:

- ☐ B-740 115-Volt Eclipse® Dryer With White Vitreous Enamel Cover
- ☐ B-748 115-Volt Eclipse® Dryer With Chrome-Plated Cover
- ☐ B-740 208–240-Volt Eclipse® Dryer With White Vitreous Enamel Cover
- ☐ B-748 208–240-Volt Eclipse® Dryer With Chrome-Plated Cover

Specify Voltage Required:

- ☐ 115V AC, 20 Amp, 2300 Watts, 50/60 Hz, Single Phase, cULus Listed.
- ☐ 208–240V AC, 9–10 Amp, 1900–2400 Watts, 50/60 Hz, Single Phase, cULus Listed, VDE Approved, CE Marked, and CCC approved.

***RECOMMENDED MOUNTING HEIGHTS**

Children's Washrooms, ages 3-4	36"	(915mm)
Children's Washrooms, ages 5-8	40"	(1015mm)
Children's Washrooms, ages 9-12	44"	(1120mm)
Universal Design	48"	(1219mm)

*Bottom screw hole of mounting base to finish face of floor

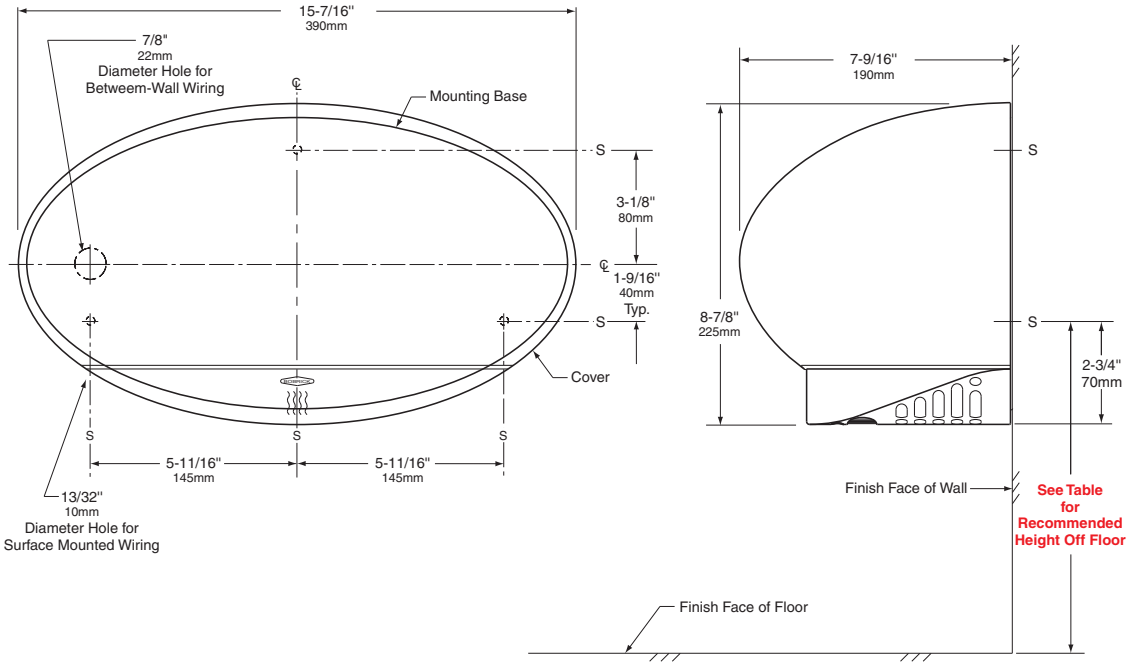

MATERIALS:

Cover — One-piece, deep-drawn, 16-gauge (1.6mm) thick steel finished in high-gloss, acid-resistant vitreous enamel or bright polished chrome-plated finish. Cover is secured to mounting base by a retaining bracket and to the air inlet/outlet grille by a single concealed locking screw.

Air Inlet/Outlet Grille — Vandal-resistant, pressure die-cast aluminium. Includes infrared sensor and operational graphics. Fixed to the mounting base by two screws and to the cover by one screw.

Mounting Base — 16-gauge (1.6mm) thick plated-steel with three 1/4" (6mm) diameter mounting holes and one 7/8" (22mm) diameter hole for electrical supply wiring.

Fan — Dynamically balanced, single inlet, directs air flow in a wide band through heating element at 105 cfm.

Motor — Universal, 1/10 hp, 6200 rpm with sealed ball bearing at drive shaft end and self-lubricating sleeve bearing at non-drive end. Equipped with automatic thermal-overload switch.

continued . . .

The illustrations and descriptions herein are applicable to production as of the date of this Technical Data Sheet.
The manufacturer reserves the right to, and does from time to time, make changes and improvements in designs and dimensions.

Rev. 4/27/11 R/A Printed in U.S.A.
© 2011 by Bobrick Washroom Equipment, Inc.

Heating Element — Coiled nickel-chrome wire is mounted on mica formers and equipped with automatic thermal-overload switch. Black, injection molded element housing is mounted on the fan inlet, heats air without hot spots—inaccessible to vandals.

Electronic Control — Infrared automatic sensor automatically turns dryer on when hands are held under air-outlet opening and across path of sensor. Remove hands from path of sensor and dryer stops. Electronic sensor has automatic shutoff approximately 1-1/2 minutes after dryer turns on if an inanimate object, such as tape or chewing gum, is placed across sensor lens. After inanimate object is removed, electronic sensor automatically resets itself and dryer operates normally.

OPERATION:

No-touch operation: electronic sensor automatically turns dryer on when hands are held under air-outlet opening and across path of sensor. Remove hands and dryer stops. Dryer will not stop by itself before user is satisfied hands are dry. Dryer operates only when actually drying hands which saves energy and operating costs. Electronic sensor will automatically shut dryer off 1-1/2 minutes after dryer turns on if an inanimate object, such as tape or chewing gum, is placed across air-outlet opening. After inanimate object is removed, electronic sensor automatically resets itself and dryer operates normally.

10-year Limited Warranty — In addition to Bobrick's one-year guarantee, Bobrick extends a limited 10-year warranty from the date of purchase for Eclipse hand dryers on all parts, except motor brushes, to the original owner of the installed unit, against defects in factory workmanship or material under normal use and service. Motor brushes are warranted for three years from date of purchase. This warranty is limited to the repair or exchange of defective parts at the option of Bobrick. See warranty card or Installation Instruction Sheet, Form No. 740-69, for full details.

INSTALLATION:

Wall Preparation: Secure mounting base on wall using template provided. For masonry walls, provide three #10 expansion shields or anchors and secure with #10 (4.8) sheet-metal screws (not furnished). For plaster or dry wall construction, provide concealed backing to comply with local building codes and secure with #10 x 1-3/4" (4.8 x 45mm) or longer, round-head sheet-metal screws or 3/16" (5mm) toggle bolts (not furnished). Provide electrical service from nearest distribution panel to dryer mounting base in conformance with local electrical codes.

Wiring Instructions:

1. **For B-740 115V and B-748 115V Dryers —** Connect ground wire to ground terminal marked ⏚, the black or hot wire to the terminal marked *L*, and neutral or white wire to the terminal marked *N*. **A DEDICATED LINE IS REQUIRED FOR EACH 115 VOLT INSTALLATION.**

2. **For B-740 208–240V and B-748 208–240V Dryers —** Connect ground wire to ground terminal marked ⏚, and the 208- or 240-volt wires to terminals marked *L* and *N*.

Notes: Electronic sensor in the Eclipse dryer will pick up movement within 6" (150mm) of the air-outlet opening. Use caution when choosing location for Eclipse dryers in confined areas. Consider proximity to doorways and other traffic areas.

Bobrick automatic hand dryers should be installed 15" (380mm) above any projection or horizontal surface which may interfere with the operation of the automatic sensor.

For installation instructions that include step-by-step installation procedures and details of electrical service connections, see Form No. 740-69, which is packed with each shipment. This form is also available in advance upon request.

SPECIFICATION:

Surface-mounted hand dryer shall have a one-piece, deep-drawn steel cover with _____ (insert one: high-gloss, acid-resistant, vitreous enamel or bright polished chrome-plated) finish. Motor shall be 1/10 hp, universal type with sealed ball bearing at drive end and self-lubricating sleeve bearing at non-drive end; equipped with automatic thermal-overload switch. Heating element shall be located on inlet side of fan, shall heat air without hot spots, be inaccessible to vandals and equipped with automatic thermal-overload switch. Electronic sensor shall automatically turn dryer on when hands are held under air-outlet opening and across path of sensor. Dryer will turn off automatically when hands are removed. Sensor shall automatically shut dryer off approximately 1-1/2 minutes after dryer turns on if an inanimate object is placed across air-outlet opening. After inanimate object is removed, electronic sensor shall automatically reset itself and dryer shall operate normally. Unit shall be cULus Listed (208-240V, AC Models, also VDE approved, CE marked). Unit shall comply with EU Directive "Restriction of Hazardous Substance" (ROHS) requirements for non-use of certain hazardous substances in the production of electronic products. Unit shall be protected by a limited 10-year warranty on all parts except motor brushes. Motor brushes shall be warranted for three years from date of purchase.

Surface-Mounted Automatic Hand Dryer shall be Model _____ (insert model number) of Bobrick Washroom Equipment, Inc., Clifton Park, New York; Jackson, Tennessee; Los Angeles, California; Bobrick Washroom Equipment Company, Scarborough, Ontario; Bobrick Washroom Equipment Pty. Ltd., Australia; and Bobrick Washroom Equipment Limited, United Kingdom.

The illustrations and descriptions herein are applicable to production as of the date of this Technical Data Sheet.
The manufacturer reserves the right to, and does from time to time, make changes and improvements in designs and dimensions.

© 2011 by Bobrick Washroom Equipment, Inc.